MIL-PRF-38534 CERTIFIED FACILITY

1200V/150A THREE PHASE BRIDGE PEM WITH BRAKE

4852

FEATURES:

- Full Three Phase Bridge Configuration with SCR/IGBT Brake
- 1200V Rated Voltage
- 150A Continuous Output Current
- Internal Zener Clamps on Gates
- Proprietary Encapsulation Provides Near Hermetic Performance
- HI-REL Screening Available (Modified 38534)
- Light Weight Domed ALSIC Baseplate
- Robust Mechanical Design for Hi-Rel Applications
- Ultra-Low Inductance Internal Layout
- Withstands 96 Hours HAST and Thermal Cycling (-55°C to +125°C)

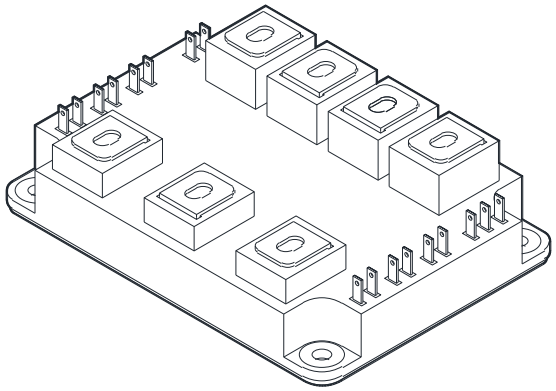

DESCRIPTION:

The MSK4852 is one of a family of plastic encapsulated modules (PEM) developed specifically for use in military, aerospace and other severe environment applications. The Three Phase Bridge configuration along with the SCR/IGBT brake circuit and 1200 volt/150 amp rating make it ideal for use in high current motor drive and inverter applications. The Aluminum Silicon Carbide (AlSiC) baseplate offers superior flatness and light weight; far better than the copper or copper alloys found in most high power plastic modules. The high thermal conductivity materials used to construct the MSK4852 allow high power outputs at elevated baseplate temperatures. Our proprietary coating, SEES™ - Severe Environment Encapsulation System - protects the internal circuitry of MSK PEM's from moisture and contamination, allowing them to pass the rugged environmental screening requirements of military and aerospace applications. MSK PEM's are also available with industry standard silicone gel coatings for a lower cost option

EQUIVALENT SCHEMATIC

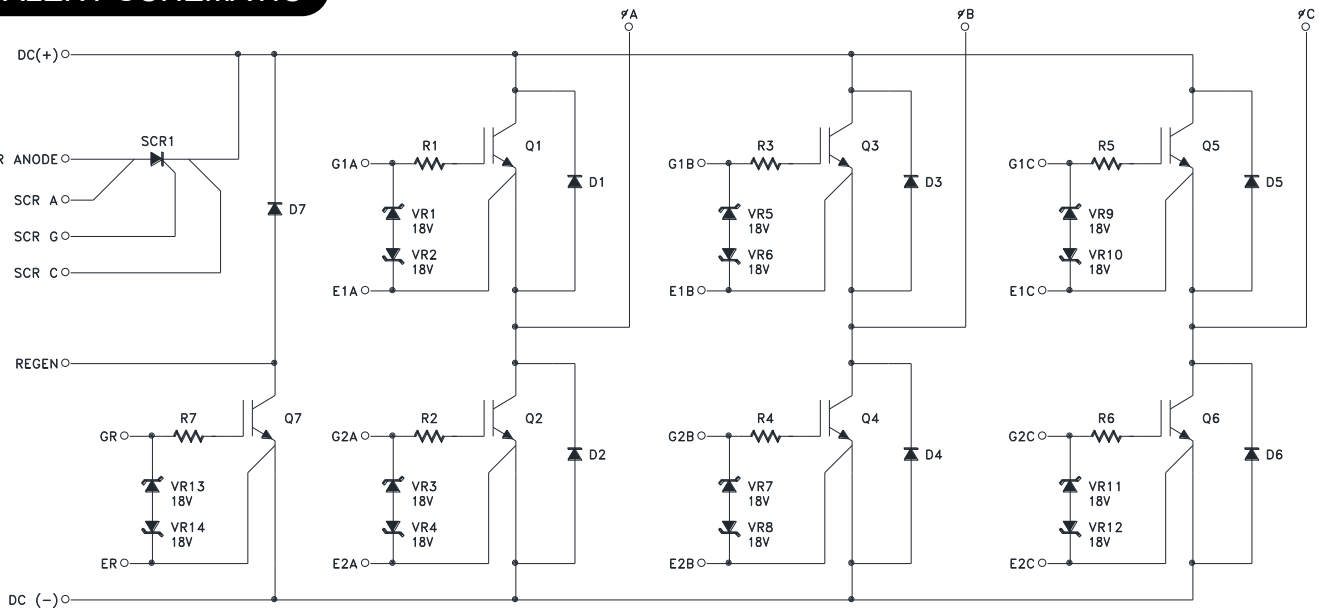

TYPICAL APPLICATIONS

- Motor Drives
- Inverters

ABSOLUTE MAXIMUM RATINGS (10)

V_{CE}	Collector to Emitter Voltage 1200V	V_{CASE}	Case Isolation Voltage 2500V
V_{GE}	Gate to Emitter Voltage .....±20V	T_{ST}	Storage Temperature Range (11) ..... -55°C to +125°C
I_{OUT}	Current (Continuous).....150A	T_J	Junction Temperature .....150°C
I_{OUTP}	Current Pulsed (1mS) 300A	T_C	Case Operating Temperature Range
$I_{SCR/REG}$	Current (Continuous).....100A		MSK4852H..... -55°C to +125°C
$I_{SCR/REG}$	Current Pulsed (1mS) 150A		MSK4852 .....-40°C to +85°C

ELECTRICAL SPECIFICATIONS

Parameter (6)	Test Conditions	Group A Subgroup	MSK4852H			MSK4852			Units
			Min.	Typ.	Max.	Min	Typ.	Max.	
Collector-Emitter Saturation Voltage (8)	IC = 150A, VGE = 15V	1	-	1.9	2.5	-	1.9	2.6	V
		2	-	2.3	2.9	-	2.3	3.0	V
		3	-	1.9	2.5	-	1.9	2.5	V
Collector-Emitter Saturation Voltage (7)	IC = 150A, VGE = 15V	1, 3	-	1.7	-	-	1.7	-	V
		2	-	1.9	-	-	1.9	-	V
Collector-Emitter Leakage Current	VCE = 1000V, VGE = 0V	1	-	0.05	6	-	0.05	8	mA
		2	-	0.1	10	-	0.1	12	mA
		(1) 3	-	0.05	6	-	0.05	8	mA
Gate Threshold Voltage	IC = 6mA, VCE = VGE	1	4.0	5.8	6.5	4.0	5.8	6.6	V
		2	3.5	5.0	6.0	3.5	5.0	6.1	V
		3	4.0	5.9	6.8	4.0	5.9	6.9	V
Gate Leakage Current	VCE = 0V, VGE = ±15V	1, 3	-10	0.1	10	-12	0.10	12	uA
		2	-10	0.15	10	-12	0.15	12	uA
Diode Forward Voltage (8)	IC = 150A	1	-	1.8	2.4	-	1.8	2.5	V
		2	-	1.8	2.4	-	1.8	2.5	V
		3	-	1.7	2.4	-	1.7	2.5	V
Diode Forward Voltage (7)	IC = 150A	1, 2	-	1.7	-	-	1.7	-	V
		3	-	1.6	-	-	1.6	-	V
SCR Reverse Leakage	VRRM = 1000V	1, 2, 3	-	0.01	10	-	0.01	12	mA
SCR On Voltage (8)	IF = 100A	1	-	1.1	1.35	-	1.1	1.4	V
		2	-	1	1.35	-	1.0	1.4	V
		3	-	1.2	1.5	-	1.2	1.6	V
SCR Holding Current		1	-	100	300	-	100	325	mA
		2	-	90	300	-	90	325	mA
		3	-	110	300	-	110	325	mA
Regen Diode Forward Voltage	IF = 50A	1	-	1.5	2.2	-	1.3	2.3	V
		2	-	1.5	2.2	-	1.5	2.3	V
		3	-	1.4	2.2	-	1.4	2.3	V
Total Gate Charge (1)	V = 600V, IC = 150A	4	-	1000	1500	-	1000	1600	nC
Turn-On Delay (1)	V = 600V, IC = 150A, RG - 20Ω	4	-	300	450	-	300	475	nS
Rise Time (1)	V = 600V, IC = 150A, RG = 20Ω	4	-	70	110	-	70	120	nS
E (on) (1)	V = 600V, IC = 150A, RG = 20Ω, VGE = -7/+15V	4	-	23	-	-	23	-	mJ
		5	-	31	-	-	31	-	mJ
E(off) (1)	V = 600V, IC = 150A, RG = 10Ω, VGE = -7/+15V	4	-	12	-	-	12	-	mJ
		5	-	17	-	-	17	-	mJ
Turn-Off Delay (1)	V = 600V, IC = 150A, RG = 10Ω	4	-	650	975	-	650	995	uS
Fall Time (1)	V = 600V, IC = 150A, RG = 10Ω	4	-	75	125	-	75	135	nS
Diode Reverse Recovery Time (1)	IE = 150A, di/dt = 1250A/uS	4	-	460	650	-	460	675	nS
Diode Reverse Recovery Charge (1)	IE = 150A, di/dt = 1250A/uS	4	-	13.4	20	-	13.4	25	uC
Thermal Resistance (1)	IGBT @ TJ= 125°C	4	-	0.19	0.21	-	0.19	0.21	°C/W
	BRIDGE DIODE @ TJ = 125°C	4	-	0.31	0.35	-	0.31	0.35	°C/W
	REGEN SCR	4	-	0.16	0.2	-	0.16	0.21	°C/W
	REGEN DIODE	4	-	0.35	0.43	-	0.35	0.44	°C/W

NOTES:

1. Guaranteed by design but not tested. Typical parameters are representative of actual device performance but are for reference only.
2. Industrial grade devices shall be tested to subgroup 1 unless otherwise specified.
3. HI-REL grade devices ("H" suffix) shall be 100% tested to subgroups 1, 2 and sample tested to subgroup 3.
4. Subgroup 4 testing available upon request.
5. Subgroup 1, 4 TA = +25°C
   2, 5 TA = +125°C
   3, 6 TA = -55°C
6. All specifications apply to both the upper and lower sections of the half bridge.
7. Measurements are made by forcing current through the power lugs and measuring the actual die drop at the small signal terminals. Measurements are provided for determining thermal dissipation on the IGBT/diode.
8. Measurements includes die, substrate, wire bond and power lug.
9. VGE = 15V unless otherwise specified.
10. Continuous operation at or above absolute maximum ratings may adversely effect the device performance and/or life cycle.
11. Internal solder reflow temperature is 180°C, do not exceed.

APPLICATION NOTES

THERMAL CALCULATIONS

Power dissipation and maximum allowable temperature rise involve many variables working together. Collector current, PWM duty cycle and switching frequency all factor into power dissipation. DC losses or "ON-TIME" losses are simply VCE(SAT) x Collector Current x PWM duty cycle. For the MSK4852, VCE(SAT) = 1.9V typically, and at 150 amps and a PWM duty cycle of 30%, DC losses equal 85.5 watts. Switching losses, in milli-joules, vary proportionally with switching frequency. The MSK4852 typical switching losses at VCE = 600V and ICE = 150A are about 48mJ, which is simply the sum of the turn-on switching loss and the turn-off switching loss. Multiplying the switching frequency times the switching losses will result in a power dissipation number for switching. The MSK4852, at 10KHz, will exhibit switching power dissipation of 480 watts. The total losses are the sum of DC losses plus switching losses, or in this case, 565.5 watts total.

565.5 watts x 0.20°C/W thermal resistance equals 113 degrees of temperature rise between the case and the junction.

Subtracting 113°C from the maximum junction temperature of 150°C equals 37°C maximum case temperature for this example.

V_{CE}(SAT) x IC x PWM duty cycle = 1.9V x 150 amps x 30% = 85.5 watts DC losses

Turn-on switching loss + Turn-off switching loss = Total switching losses = 31 + 17 = 48mJ

Total switching loss x PWM frequency = Total switching power dissipation = 48mJ x 10KHz = 480watts

Total power dissipation = DC losses + switching losses = 85.5 + 480 = 565.5 watts

Junction temperature rise above case = Total power dissipation x thermal resistance

565.5 watts x 0.2°C/W = 113°C temperature rise above case

Maximum junction temperature - junction temperature rise = maximum baseplate temperature

150°C - 113°C = 37°C

TYPICAL PERFORMANCE CURVES

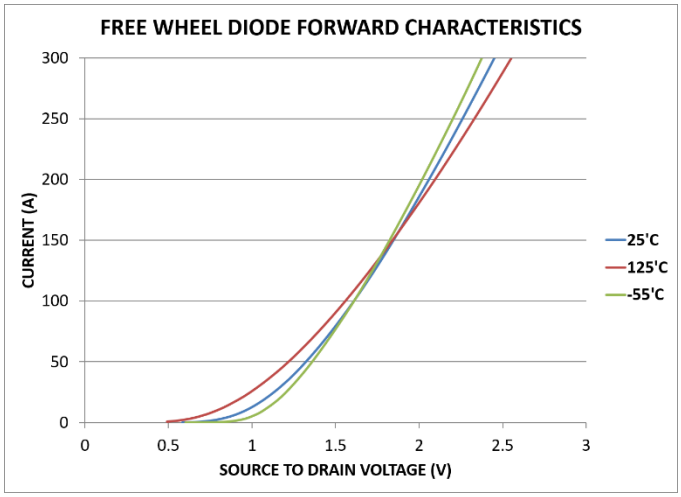

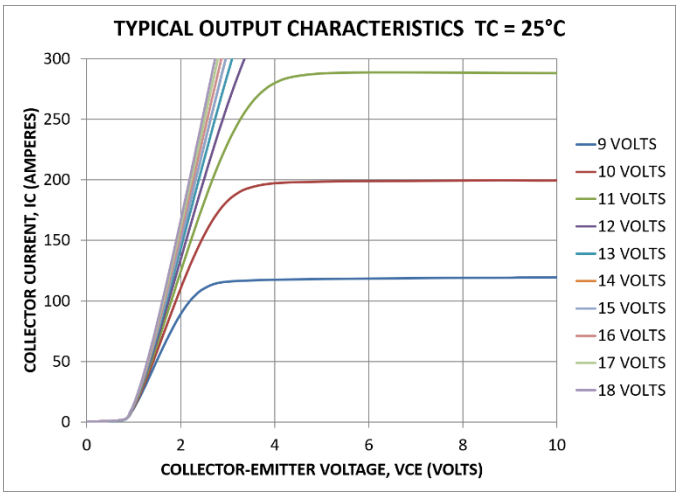

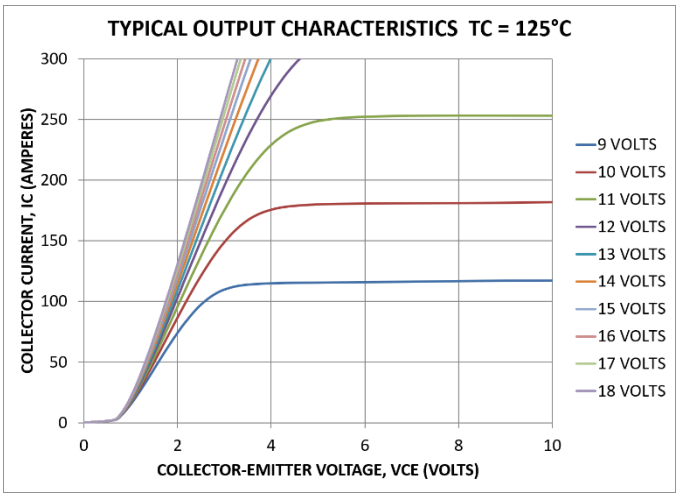

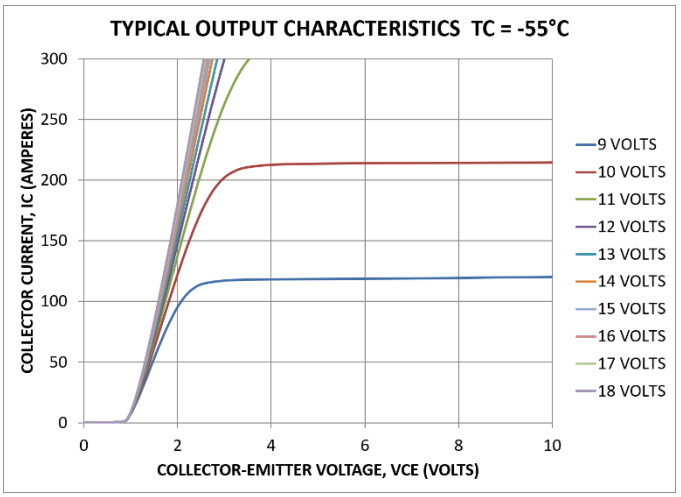

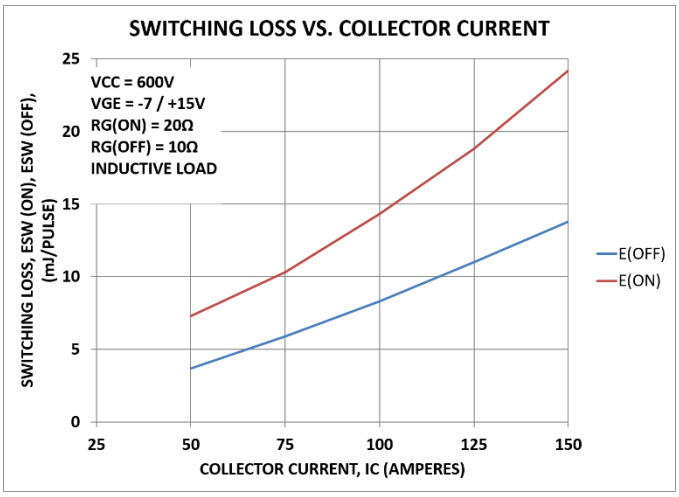

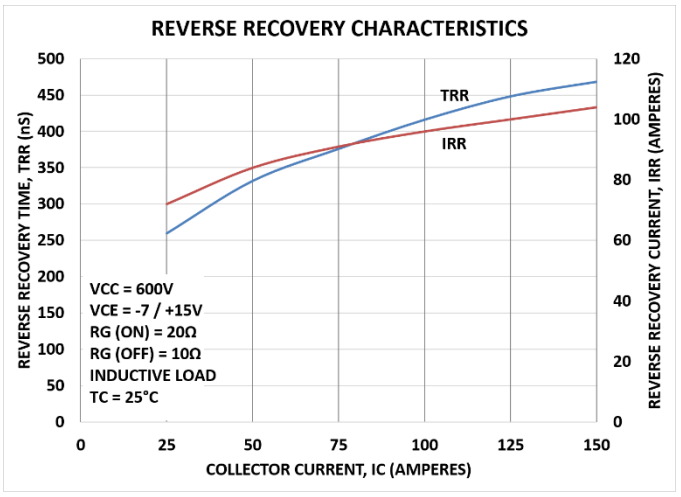

SCREENING CHART

OPERATION	INDUSTRIAL	H SUFFIX
QUALIFICATION (MODIFIED)	NO	YES
ELEMENT EVALUATION	NO	YES
CLEAN ROOM PROCESSING	YES	YES
NON DESTRUCT BOND PULL SAMPLE	YES	YES
CERTIFIED OPERATORS	NO	YES
MIL LINE PROCESSING	YES	YES
MAX REWORK SPECIFIED	NO	YES
ENCAPSULANT	GEL COAT	SEES TM
PRE-CAP VISUAL	YES - INDUSTRIAL	YES - CLASS H
TEMP CYCLE (-55°C TO +125°C)	NO	YES
BURN-IN	NO	YES - 160 HOURS
ELECTRICAL TESTING	YES - 25°C	YES - FULL TEMP
EXTERNAL VISUAL	YES - SAMPLE	YES
XRAY	NO	NO
PIN FINISH	NI	NI

NOTE: ADDITIONAL SCREENING IS AVAILABLE SUCH AS XRAY, CSAM, MECHANICAL SHOCK, ETC. CONTACT FACTORY FOR QUAL STATUS.

MECHANICAL SPECIFICATIONS

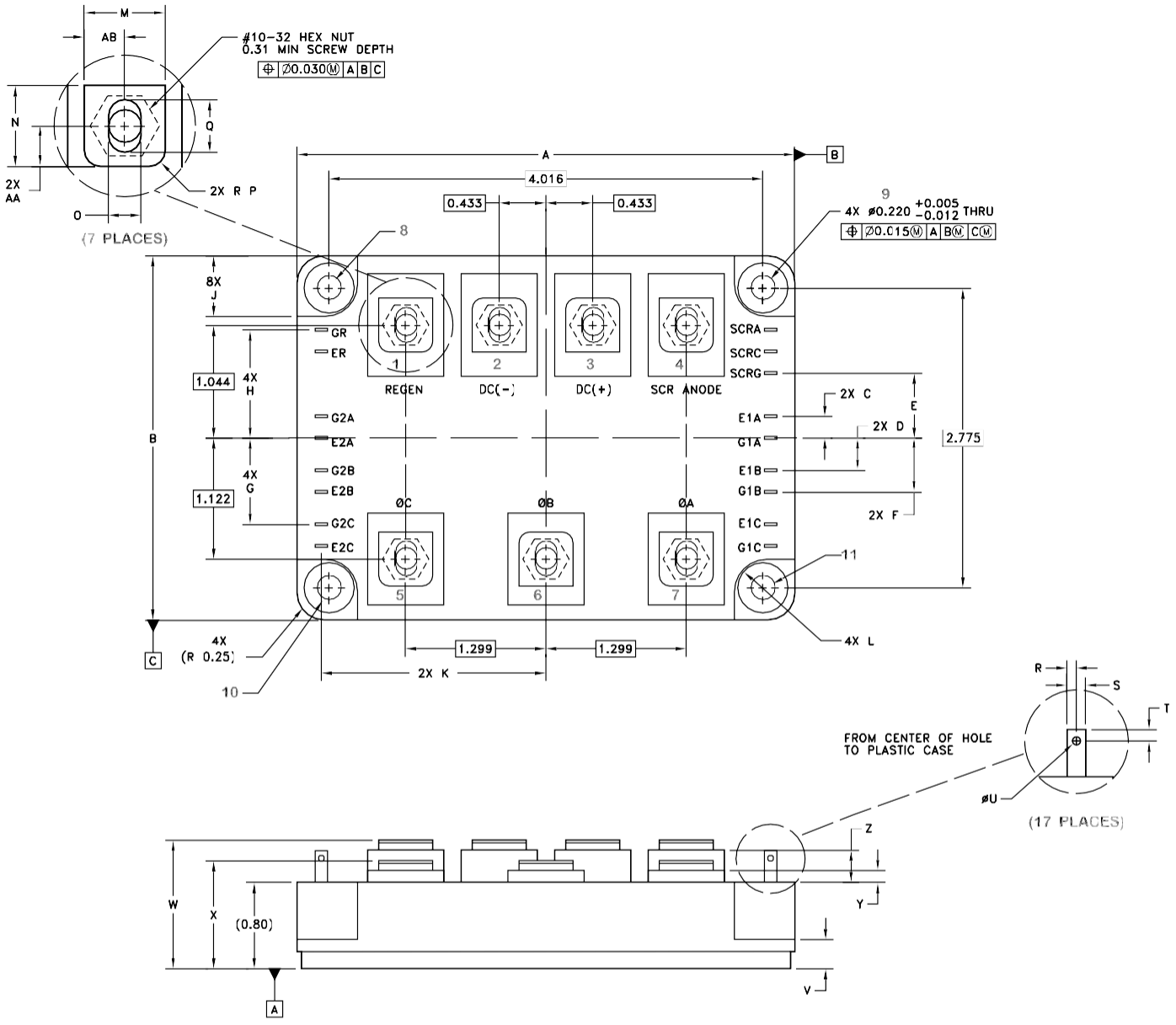

REF	MIN	MAX	REF	MIN	MAX
9	0.208	0.225	O	0.195	0.230
A	4.575	4.645	P	0.10	———
B	3.340	3.390	Q	0.310	0.340
C	0.19	0.21	R	0.048	0.068
D	0.29	0.31	S	0.105	0.125
E	0.59	0.61	T	0.060	0.080
F	0.49	0.51	U	0.040	0.060
G	0.79	0.81	V	0.255	0.285
H	0.99	1.01	W	1.175	1.205
J	0.520	———	X	0.985	1.015
K	2.060	2.100	Y	0.09	0.11
L	0.24	———	Z	0.28	0.30
M	0.50	0.55	AA	0.000	0.40
N	0.50	0.70	AB	0.02	0.03

TRUE POSITION OF POWER TERMINAL HEX NUTS & MOUNTING HOLE POSITIONS

REF	XDIM	YDIM
1	-1.299	1.044
9	2.008	1.3875

WEIGHT = 442 GRAMS MAX.

ALL DIMENSIONS ARE SPECIFIED IN INCHES

FOR CONVEX BASEPLATE PROFILE SEE SHEET 7

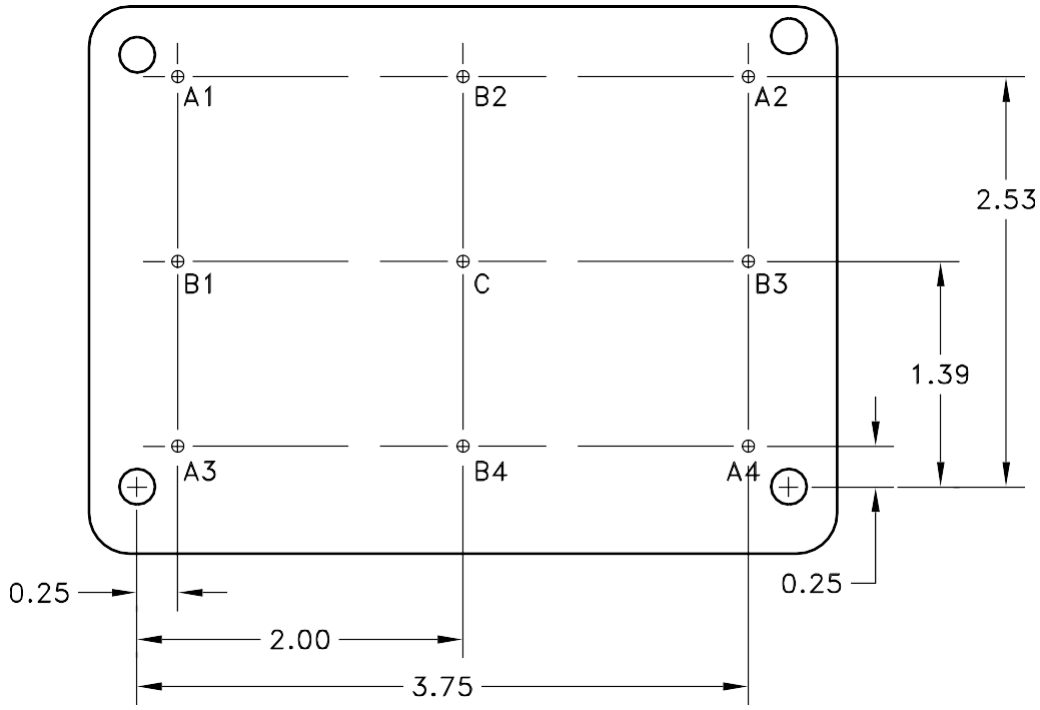

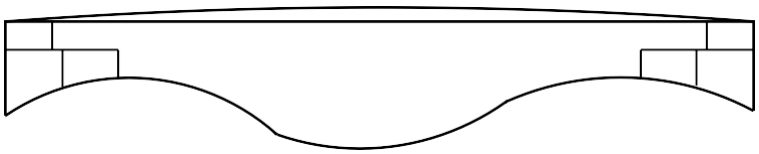

POWER MODULE SIDE VIEW (EXAGGERATED DOME)

CONVEX BASEPLATE PROFILE

REF	ZMIN	ZMAX
A1	0.000	0.010
A2	0.000	0.010
A3	0.000	0.010
A4	0.000	0.010
B1	0.000	0.010
B2	0.000	0.010
B3	0.000	0.010
B4	0.000	0.010

NOTE:

1.(A1, A2, A3, B1, B2, B3 & B4) REFERENCED TO POINT C.

ALL DIMENSIONS ARE SPECIFIED IN INCHES

ORDERING INFORMATION

MSK4852 H

SCREENING

BLANK = INDUSTRIAL; H = HI-REL (MODIFIED 38534)

GENERAL PART NUMBER

THE ABOVE EXAMPLE IS A MILITARY SCREENED MODULE

REVISION HISTORY

REV	STATUS	DATE	DESCRIPTION
I	Released	03/14	Add form #, add new note for solder reflow, add typical performance curves and claridy reference dimensions.
J	Released	01/23	Remove MIL-PRF-38535, update company name and website
K	Released	11/26	Update thermals

The information contained herein is believed to be accurate at the time of printing. TTM Technologies reserves the right to make changes to its products or specifications without notice, however and assumes no liability for the use of its products.
Please visit our website for the most recent revision of this data sheet.