MIL-PRF-38534 CERTIFIED FACILITY

5 AMP, 55V, H-BRIDGE MOSFET BRUSHED MOTOR CONTROLLER

4253
4253-1

FEATURES:

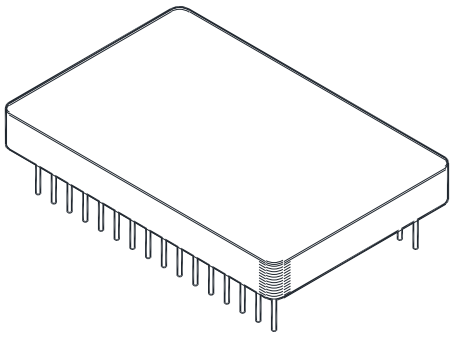

- 55 Volt Motor Supply Voltage
- 5 Amp Output Switch Capability
- 100% Duty Cycle High Side Conduction Capable
- Shoot-Through/Cross Conduction Protection
- "Real" Four Quadrant Torque Control Capability
- Good Accuracy Around the Null Torque Point
- Contact TTM for MIL-PRF-38534 Qualification Status

DESCRIPTION:

The MSK4253 is a complete H-bridge MOSFET Brushed Motor Control System in an electrically isolated hermetic package. The hybrid is capable of 5 amps of output current and 55 volts of DC bus voltage. It has the normal features for protecting the bridge. Included is all the bridge drive circuitry, and all the current sensing and analog circuitry necessary for closed loop current mode (torque) control. When PWM'ing, the transistors are modulated in locked anti-phase mode for the tightest control and the most bandwidth. Provisions for applying different compensation schemes are included. The MSK 4253 has good thermal conductivity of the MOSFET's due to isolated substrate/package design that allows direct heat sinking of the hybrid without insulators.

EQUIVALENT SCHEMATIC

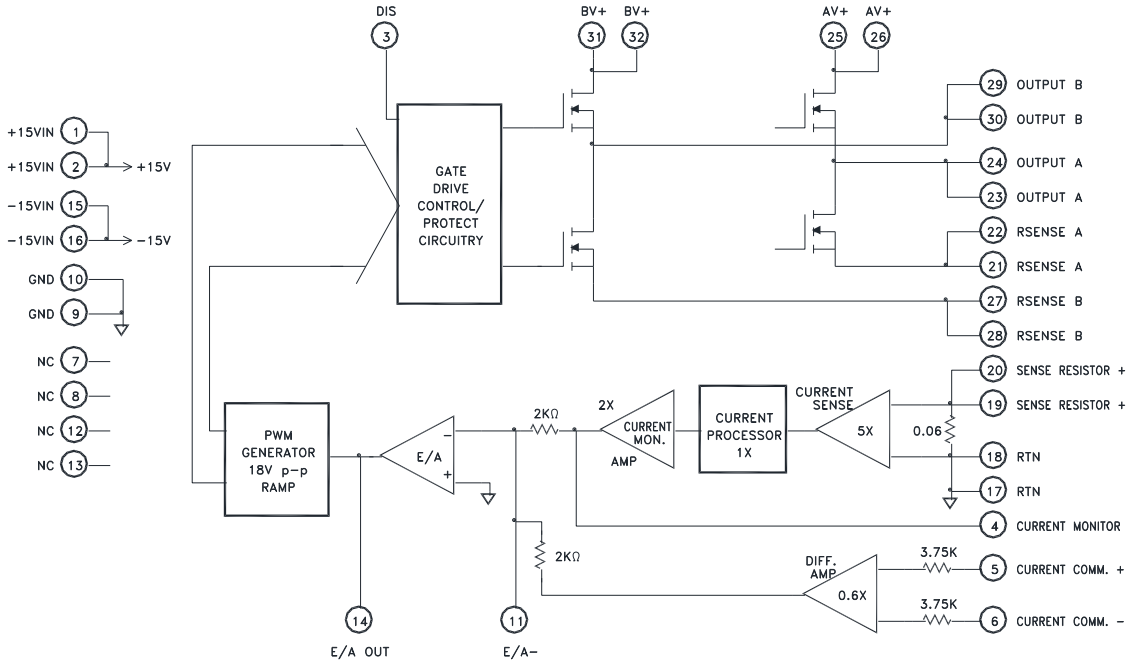

TYPICAL APPLICATIONS

- Brushed DC Motor Control
- Servo Control
- Fin Actuator Control
- Voice Coil Control
- Gimbal Control
- AZ-EL Control

ABSOLUTE MAXIMUM RATINGS (8)

$V+$	High Voltage Supply (9) 55V	θ_{JC}	Thermal Resistance @ 125°C ..... 14.32°C/W
V_{IN}	Current Command Input ..... ±13.5V	T_{ST}	Storage Temperature Range ..... -65°C to 150°C
$+V_{CC}$	..... +16V	T_{LD}	Lead Temperature Range ..... +300°C (10 Seconds)
$-V_{CC}$	..... -18V	T_C	Case Operating Temperature
I_{OUT}	Continuous Output Current 5A		MSK4253, 4253-1 ..... -40°C to +125°C
I_{PK}	Peak Output Current 10A		MSK4253H, 4253H-1 ..... -55°C to +125°C
		T_J	Junction Temperature ..... +150°C

ELECTRICAL SPECIFICATIONS

All ratings: Tc = +25°C unless otherwise specified.

Parameter	Test Conditions	Group A Subgroup (4)(5)	MSK4253H (3)(10) MSK4253H-1			MSK4253 (2)(10) MSK4253-1			Units
			Min.	Typ.	Max.	Min	Typ.	Max.	
POWER SUPPLY REQUIREMENTS									
$+V_{CC}$	@ +15V	1, 2, 3	-	60	85	-	60	85	mA
$-V_{CC}$	@ -15V	1, 2, 3	-	16	35	-	16	35	mA
PWM									
Free Running Frequency		4	23.5	25	26.5	22	25	28	KHz
		5, 6	21.25	25	28.75	-	-	-	KHz
CONTROL									
Transconductance (7)	±5 Amps Output	4, 5, 6	0.9	1.0	1.1	0.8	1.0	1.2	Amp/Volt
Current Monitor (7)	±5 Amps Output	4, 5, 6	0.51	0.6	0.69	0.48	0.6	0.72	V/Amp
Output Offset	@ 0 Volts Command	4	-	±5.0	±25.0	-	±5.0	±35.0	mAmp
		5, 6	-	±75.0	±150.0	-	-	-	mAmp
ERROR AMP									
Input voltage Range (1)		-	±11	±12	-	±11	±12	-	Volts
Slew Rate (1)		-	6.5	8	-	6.5	8	-	V/µSec
Output Voltage Swing (1)		-	±12	±13	-	±12	±13	-	Volts
Gain Bandwidth Product (1)		-		6.5	-		6.5	-	MHz
Large Signal Voltage Gain (1)		-	175	275	-	175	275	-	V/mV
OUTPUT									
Rise Time (1)		-	-	100	-	-	100	-	nSec
Fall Time (1)		-	-	100	-	-	100	-	nSec
Leakage Current (1)	@ 44V, +150°C Junction	-	-	-	750	-	-	750	µAmps
Voltage Drop Across Bridge (1 Upper and 1 Lower) (1)	@ 5 Amps	-	-	-	0.6	-	-	0.6	Volts
voltage Drop Across Bridge (1 Upper and 1 Lower) (1)	@ 5 Amps, +150°C Junction	-	-	-	1.2	-	-	1.2	Volts
Drain-Source on Resistance (Each MOSFET) (6)	@ 5 Amps, +150°C Junction	-	-	-	0.1	-	-	0.1	Ω
Diode V_{SD} (1)	@ 5 Amps, Each FET	-	-	-	2.6	-	-	2.6	Volts
T_{RR} (1)	IF = 5 Amps, di/dt = 100A/µS	-	-	280	-	-	280	-	nSec
Dead Time (1)		-	-	2	-	-	2	-	µSec

NOTES:

(1) Guaranteed by design but not tested. Typical parameters are representative of actual device performance but are for reference only.

(2) Industrial grade devices shall be tested to subgroups 1 and 4 unless otherwise specified.

(3) Military grade devices ("H" Suffix) shall be 100% tested to Subgroups 1, 2, 3 and 4.

(4) Subgroups 5 and 6 testing available upon request.

(5) Subgroup 1, 4 TA = TC = +25°C
2, 5 TA = TC = +125°C
3, 6 TA = TC = -55°C

(6) This is to be used for MOSFET thermal calculation only.

(7) Measurements do not include offset current at 0V current command.

(8) Continuous operation at or above absolute maximum ratings may adversely effect the device performance and/or life cycle.

(9) When applying power to the device, apply the low voltage followed by the high voltage or alternatively, apply both at the same time. Do not apply high voltage without low voltage present.

(10) MSK4253 and MSK4253-1 are form/fit/function identical with minor differences in internal electronics to perform the same function.

MSK 4253 PIN DESCRIPTIONS

AV+, BV+ - are the power connections from the hybrid to the bus. All pins for the motor voltage supply should be connected together to share the current through the pins in the hybrid. The external wiring to these pins should be sized according to the RMS current required by the motor. A high quality monolithic ceramic capacitor for high frequencies and enough bulk capacitance for keeping the V+ supply from drooping should bypass these pins. 100µF minimum is recommended. Capacitors should be placed as close to these pins as practical. The addition of high quality ceramic capacitance will help with noise issues.

NOTE: *This is a power sequence sensitive part. Either turn all supplies on simultaneously or provide ±15V first, then V+ voltage.*

OUTPUT A, OUTPUT B - are the connections to the motor phase windings from the bridge output. The wiring to these pins should be sized according to the required current by the motor. There are no short circuit provisions for these outputs. Shorts to V+ or gound from these pins must be avoided or the bridge will be destroyed.

RTN - is the power return connection from the module to the bus. All internal ground returns connect to this point inside the hybrid. All capacitors from the V+ bus should connect to this point as close as possible. All external V+ return connections should be made as close to these pins as possible. Wiring sizing to this pin should be made according to the required current.

GND - is the return point for the low powered circuitry inside the hybrid. All GND pins should be tied together. All capacitors for bypassing the + and -15V supplies should be tied at this point, as close to the pins as possible. Any ground plane connections for low powered and analog circuitry outside the hybrid should be tied to this point.

+15VIN - is the input for applying +15 volts to run the low power section of the hybrid. Both pins should be used together for optimum operation. These pins should be bypassed with a 10µF capacitor and a 0.1µF capacitor as close to these pins as possible.

NOTE: *This is a power sequence sensitive part. Either turn all supplies on simultaneously or provide ±15V first, then V+ voltage.*

-15VIN - is the input for applying -15 volts to run the low power section of the hybrid. Both pins should be used together for optimum operation. These pins should be bypassed with a 10µF capacitor and a 0.1µF capacitor as close to these pins as possible.

NOTE: *This is a power sequence sensitive part. Either turn all supplies on simultaneously or provide ±15V first, then V+ voltage.*

SENSE RESISTOR + - is the top of the sense resistor for sensing the bridge current and closing the loop. The bottom of the sense resistor is RTN. All RSENSE A and RSENSE B pins should be connected to this point, with connections being as short as possible.

RSENSE A, RSENSE B - are the power pins for the bottom of the bridge. Both of these pins are to be connected to sense resistor +, with connections being as short as possible.

DIS - is a pin for externally disabling the output bridge. A TTL logic low will enable the bridge and a TTL high will disable it. It is internally pulled up by a 100µAmp pull-up.

CURRENT COMMAND (+,-) - are differential inputs for controlling the module in current mode. Scaled at 1 amp per volt of input command, the bipolar input allows both forward and reverse current control capability regardless of motor direction. The maximum operational command voltage should be ±5 volts for ±5 amps of motor current. Going beyond 5 volts of command voltage will force the bridge to conduct more than the desired maximum current. There is internal current limiting that will ultimately limit the absolute maximum current being output by the bridge.

CURRENT MONITOR - is a pin providing a current viewing signal for external monitoring purposes. This is scaled at ±1 amp of motor current per ±0.6 volts output, up to a maximum of ±3 volts, or ±5 amps. Going beyond the 3 volt maximum may result in clipping of the waveform peaks. The input impedance is approximately 3.75KΩ for each pin. In DIS mode, the CURRENT MONITOR output may rail positive or negative, depending on internal bias currents. When re-enabled, this output will resume expected operation.

E/A OUT - is the current loop error amplifier output. It is brought out for allowing various loop compensation circuits to be connected between this and E/A-.

E/A- - is the current loop error amplifier inverting input. It is brought out for allowing various loop compensation circuits to be connected between this and E/A OUT.

APPLICATION NOTES CONTINUED

BUS VOLTAGE FILTER CAPACITORS

The size and placement of the capacitors for the DC bus has a direct bearing on the amount of noise filtered and also on the size and duration of the voltage spikes seen by the bridge. What is being created is a series RLC tuned circuit with a resonant frequency that is seen as a damped ringing every time one of the transistors switches. For the resistance, wire resistance, power supply impedance and capacitor ESR all add up for the equivalent lumped resistance in the circuit. The inductance can be figured at about 30 nH per inch from the power supply. Any voltage spikes are on top of the bus voltage and the back EMF from the motor. All this must be taken into account when designing and laying out the system. If everything has been minimized, there is another solution. A second capacitance between 5 and 10 times the first capacitor and it should either have some ESR or a resistor can be added in series with the second capacitor to help damp the voltage spikes.

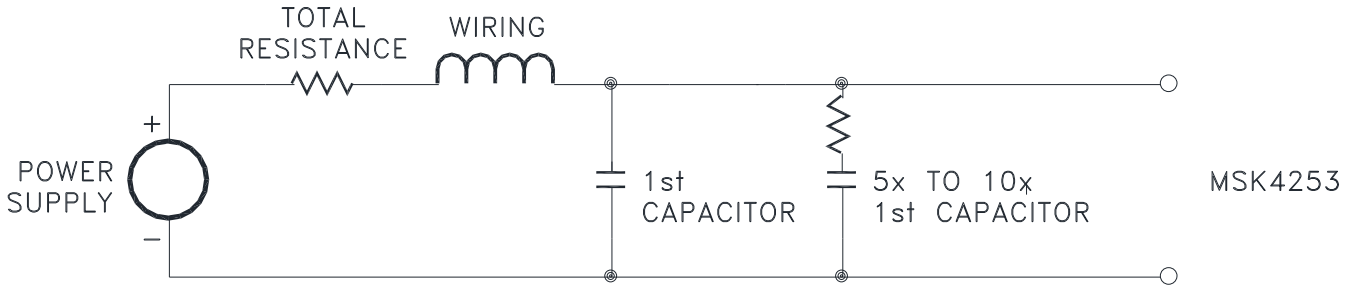

Be careful of the ripple current in all the capacitors. Excessive ripple current, beyond what the capacitors can handle, will destroy the capacitors.

±15VIN FILTER CAPACITORS

It is recommended that about 10 µF of capacitance (tantalum electrolytic) for bypassing the + and -15V inputs be placed as close to the module pins as practical. Adding ceramic bypass capacitors of about 0.1 µF or 1 µF will aid in suppressing noise transients.

GENERAL LAYOUT

Good PC layout techniques are important. Ground planes for the analog circuitry must be used and should be tied back to the small signal grounds, pins 9 and 10. The high power grounds (RTN) pins 17 and 18 get tied back to the small signal ground internally. DO NOT connect these grounds externally. A ground loop will result.

LOW POWER STARTUP

When starting up a system utilizing the MSK 4253 for the first time, there are a few things to keep in mind. First, because of the small size of the module, short circuiting the output phases either to ground or the DC bus will destroy the bridge. The current limiting and control only works for current actually flowing through the bridge. The current sense resistor has to see the current in order for the electronics to control it. If possible, for startup use a lower voltage and lower current power supply to test out connections and the low current stability. With a limited current supply, even if the controller locks up, the dissipation will be limited. By observing the E/A OUT pin which is the error amp output, much can be found out about the health and stability of the system. An even waveform with some rounded triangle wave should be observed. As current goes up, the DC component of the waveform should move up or down. At full current (with a regular supply) the waveform should not exceed +9 volts positive peak, or -9 volts negative peak. Some audible noise will be heard which will be the commutation frequency. If the motor squeals, there is instability and power should be removed immediately unless power dissipation isn't excessive due to limited supply current. For compensation calculations, refer to the block diagram for all information to determine the amplifier gain for loop gain calculations. For the power up sequence, ±15 volts should be powered at the same time or before the V+ voltage is applied.

MSK4253 TEST CIRCUIT

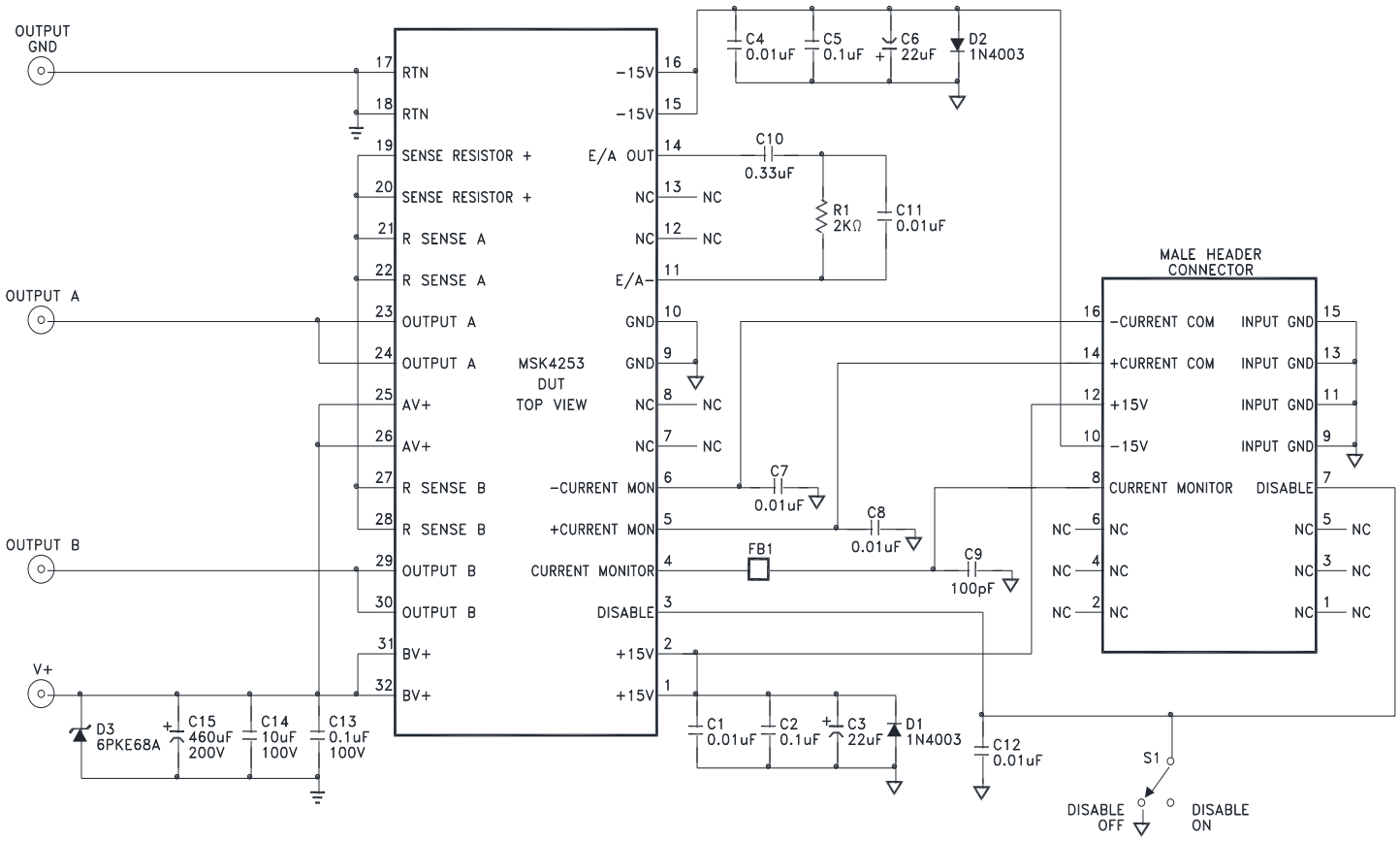

NOTES:

1. FB1 (FERRITE BEAD) IS A PALOMAR ENGINEERS PART #FB15-43.
2. COMPONENTS C1,C2,C4,C5,C7-C13,R1 & FB1 MUST BE MOUNTED AT THE DESIGNATED DEVICE PINS.
3. COMPONENTS C3,6,14, & 15 MUST BE MOUNTED AS CLOSE AS PHYSICALLY POSSIBLE TO THE DESIGNATED DEVICE PINS.
4. OUTPUT GROUND AND INPUT GROUND ARE TWO SEPERATE GROUND PLANES. THEIR DIVISION RUNS UNDERNEATH THE DEVICE AND THEY ARE CONNECTED TOGETHER THROUGH A SMALL PC BOARD TRACE OR WIRE RUNNING FROM DEVICE PINS 17 & 18 TO DEVICE PINS 9 & 10.

MECHANICAL SPECIFICATIONS

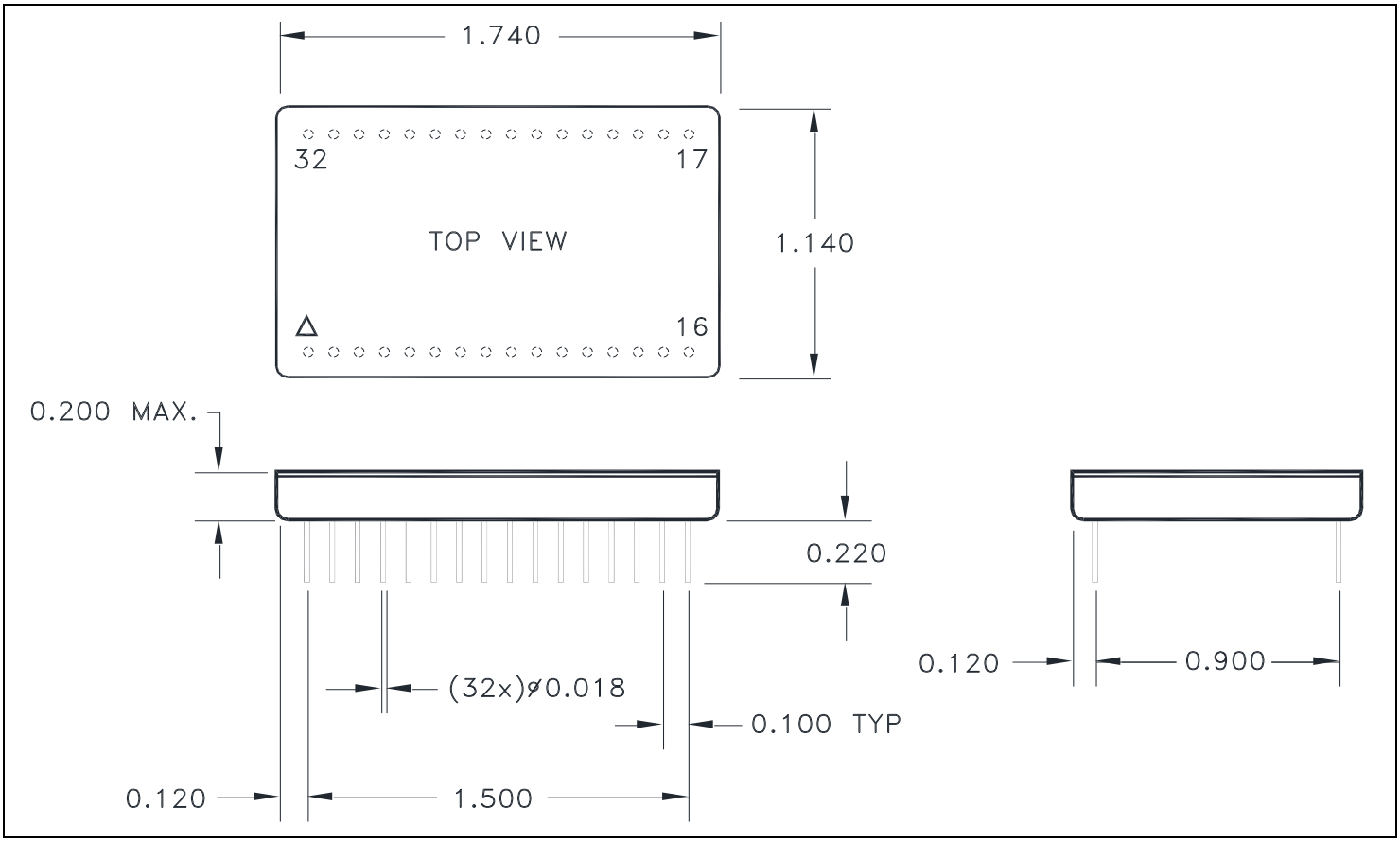

NOTE: ALL DIMENSIONS ARE ±0.010 INCHES UNLESS OTHERWISE LABELED.
ESD Triangle indicates Pin 1.

ORDERING INFORMATION

Part Number	Screening Level	Status
MSK4253	Industrial	Obsolete
MSK4253H	MIL-PRF-38534 Class H	Obsolete
MSK4253-1	Industrial	Active and Available
MSK 4253H-1	MIL-PRF-38534 Class H	Active and Available

REVISION HISTORY

REV	STATUS	DATE	DESCRIPTION
A	Released	10/25	Initial Release of Doc Number 8548-190; Add MSK 4253
B	Released	11/25	Typo on page 2; ERROR AMP: MSK 4253 (Min, Typ, Max) section
C	Released	07/26	Revise Thermal Resistance

The information contained herein is believed to be accurate at the time of printing. TTM Technologies reserves the right to make changes to its products or specifications without notice, however and assumes no liability for the use of its products. Please visit our website for the most recent revision of this data sheet.